MicroBooNE

Status update
Detector Calibration

Thomas Strauss

AEM, 2014-02-10

UNIVERSITÄT BERN
AEC
ALBERT EINSTEIN CENTER
FOR FUNDAMENTAL PHYSICS

Status

- LArTF:
  - Phase I cryo system filled with LAr as of last week.
  - Filter regeneration system is operating.
  - First LAr breakdown measurements being in HVC
  - DAB:
  - LED flasher system for PMT calibration installed

HV breakdown measurement at LHEP Bern

arxiv:1401.6693

Motivated by recent concerns about the di-electric strength of liquid Argon

- Sphere (r=40mm) to flat ground plate, max applied voltage 130kV
- Distance range sphere to ground plane 0.1-40mm
- Two types of discharges: sphere to ground (0.1-40cm) and flash-over between sphere and feed-through (~30cm)

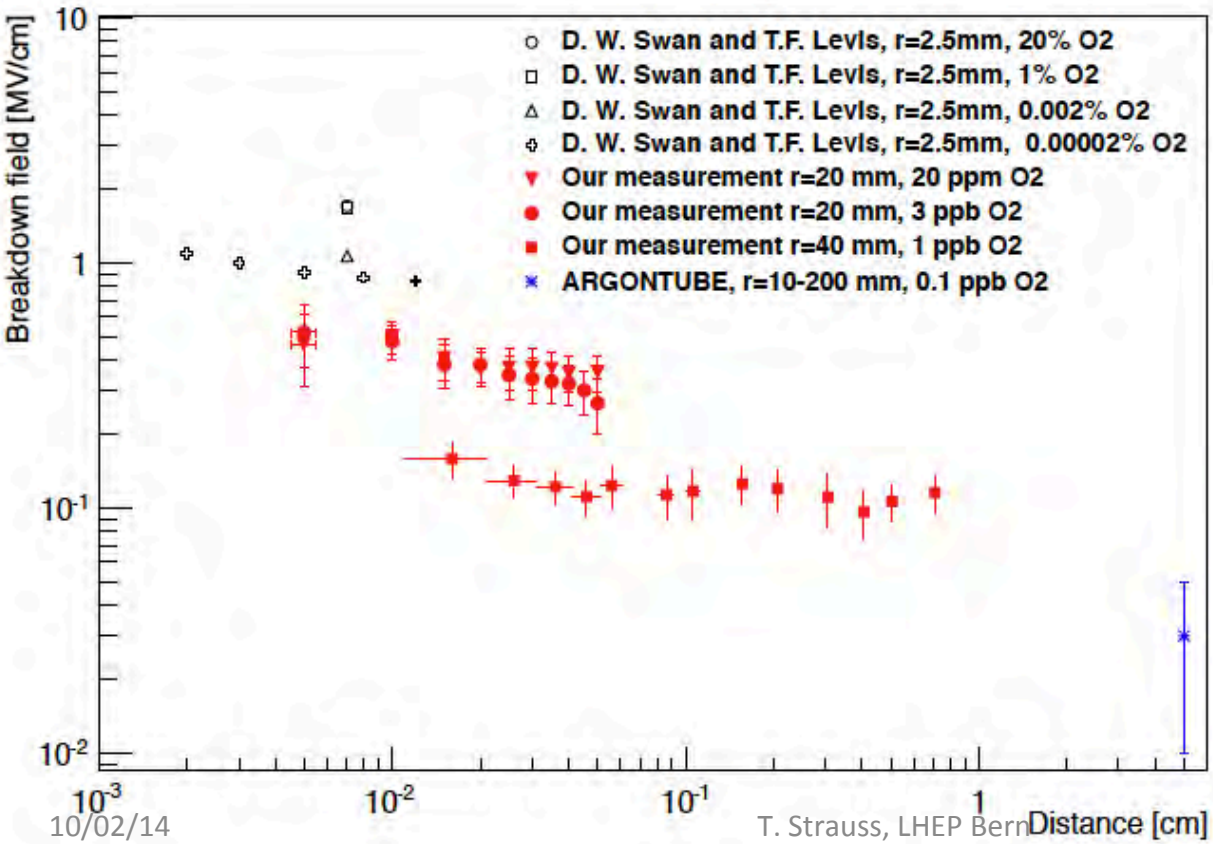

Sphere r=40mm to flat ground

- Breakdowns through liquid argon observed at as low as 40 kV/cm at cm scale gaps
- **MicroBooNE has a maximum field of 35kV/cm @128kV cathode voltage**

LArTF HV Test Setup

This goes into the cryostat

MicroBooNE production HV feed-thru operating well with no trips (limited to 3 day tests until phase I operating)

NOW: test for different distances from 1mm-1”

Translator can move the probe vertically

HV Probe

Grounded plate

Mirrors angled to see breakdown space from viewports

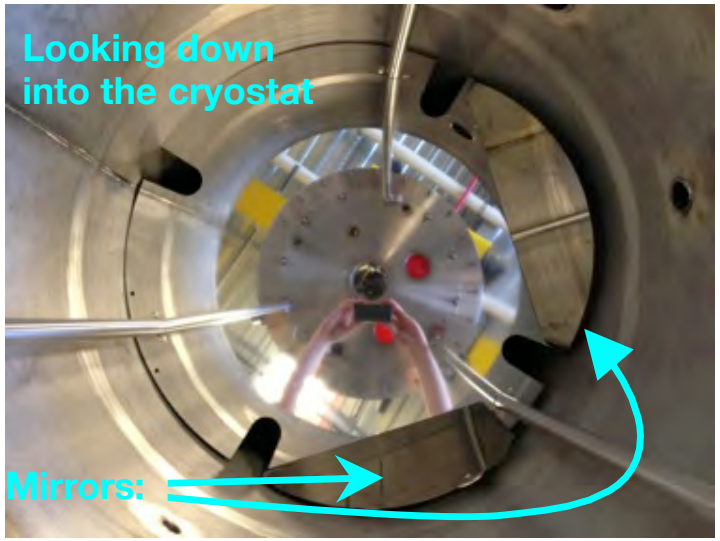

The MicroBooNE UV laser calibration system

- Measure electric field distortion by introducing straight ionizing tracks
- Additional tool to measure:
  - Purity
  - Diffusion
  - Recombination

Design of the system allows automatic operation, remote control access to optimize laser beam path and power

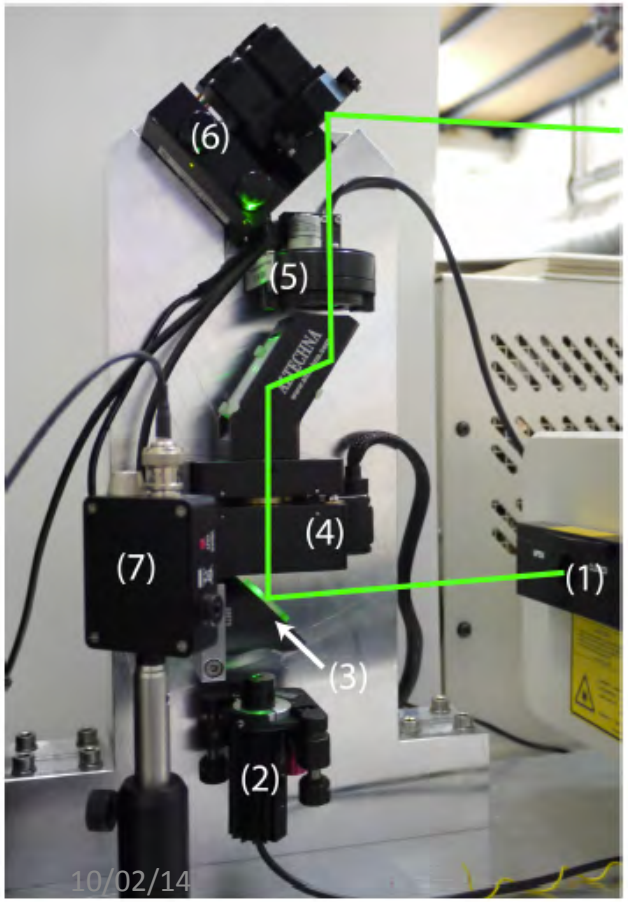

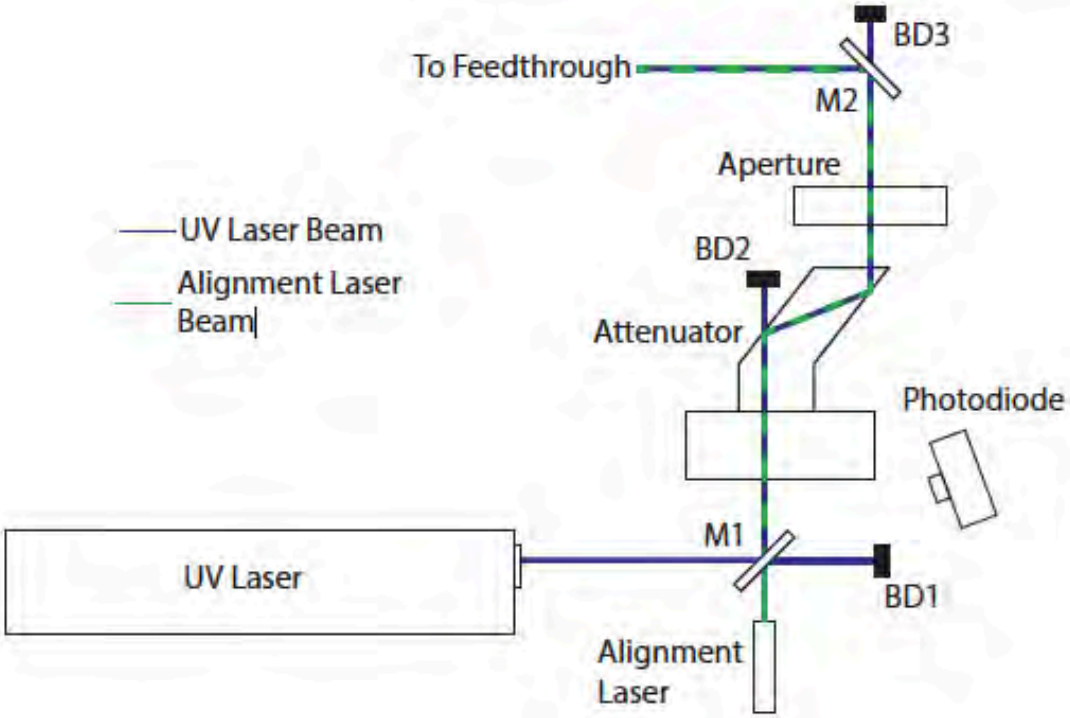

(1) UV laser, (2) Alignment laser, (3) Fixed Mirror, (4) Attenuator, (5) Iris, (6) Moveable Mirror, (7) Photo Diode

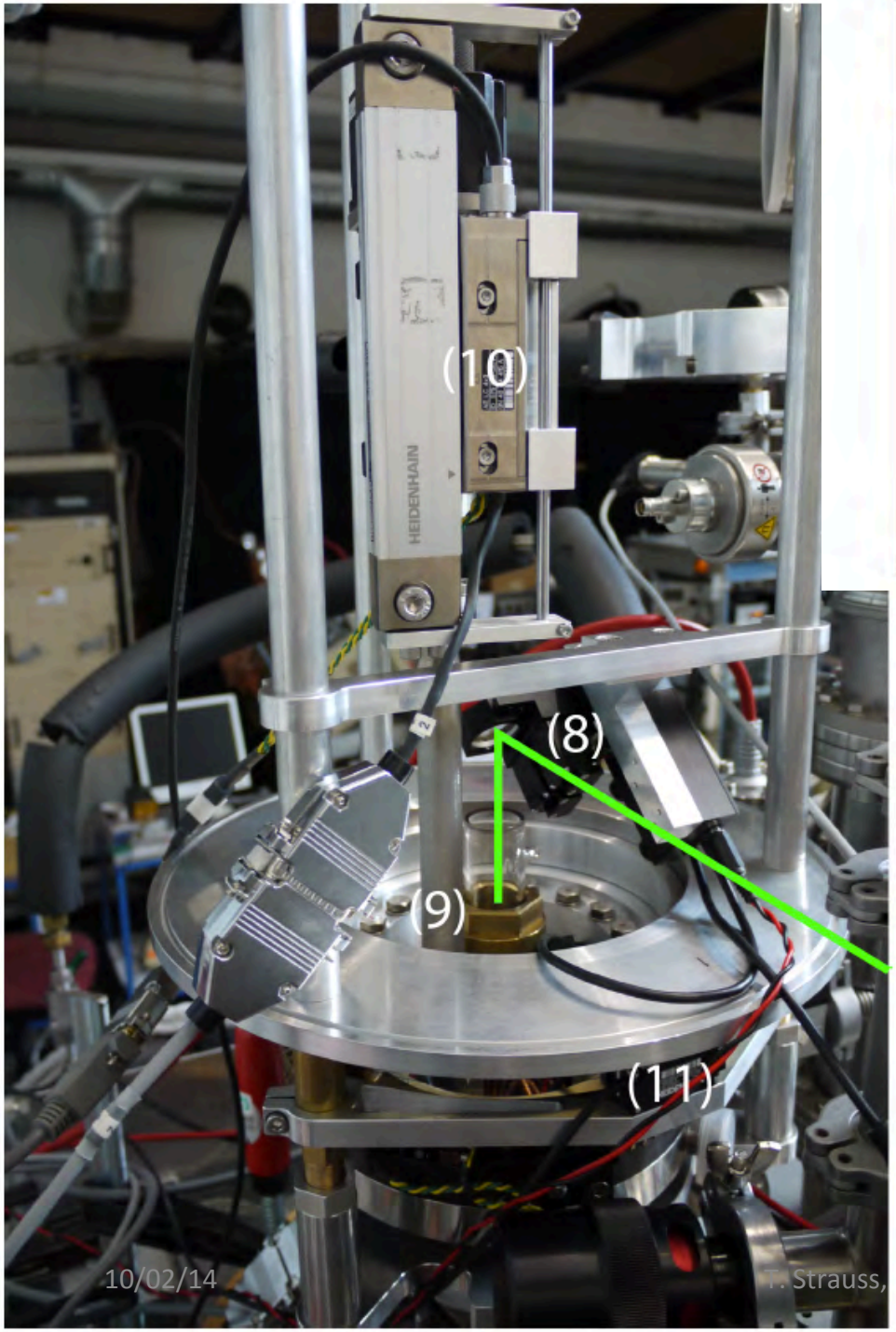

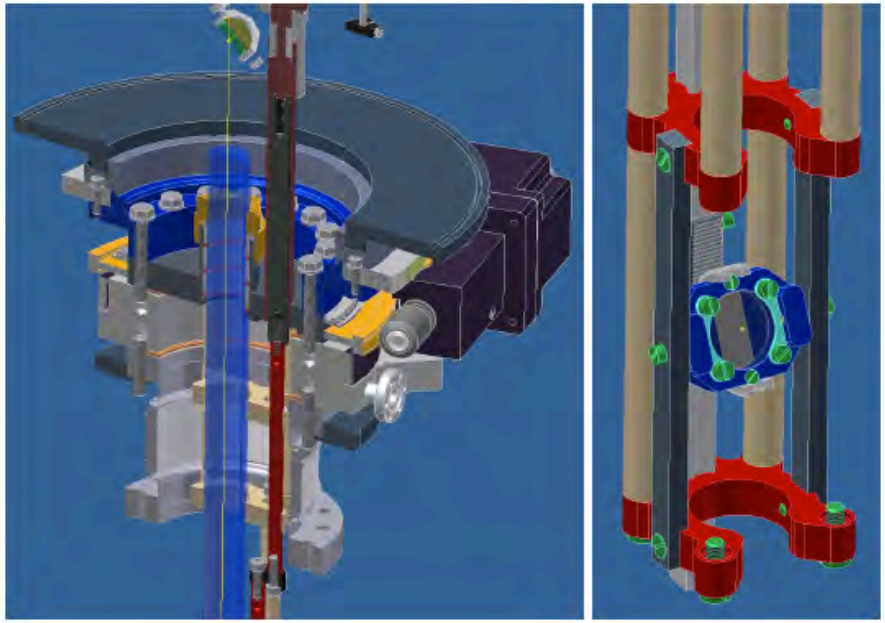

Vacuum flange with steerable cold mirror in the liquid Argon
(8) Moveable Mirror
(9) Quartz glass tube
(10) Linear Actuator and encoder
(11) Rotary feed-through and encoder

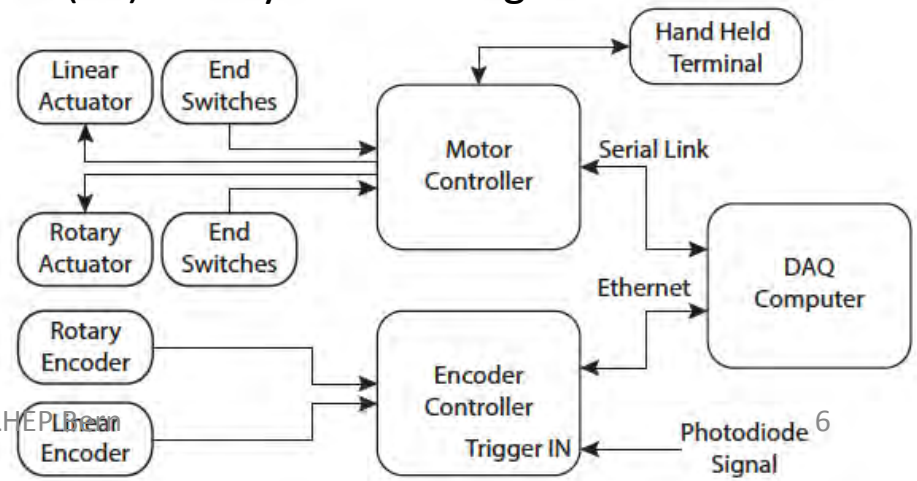

All components are in hand and right now in shipment to Fermilab with the MS Paris Express

Preparation of install-ation on cryostat

Assembly is anticipated in April

Results of prototype TPC in Bern

- Laser path before and after distortion introduced by shortening 2 field cage rings of the TPC agrees with simulation of the drift field

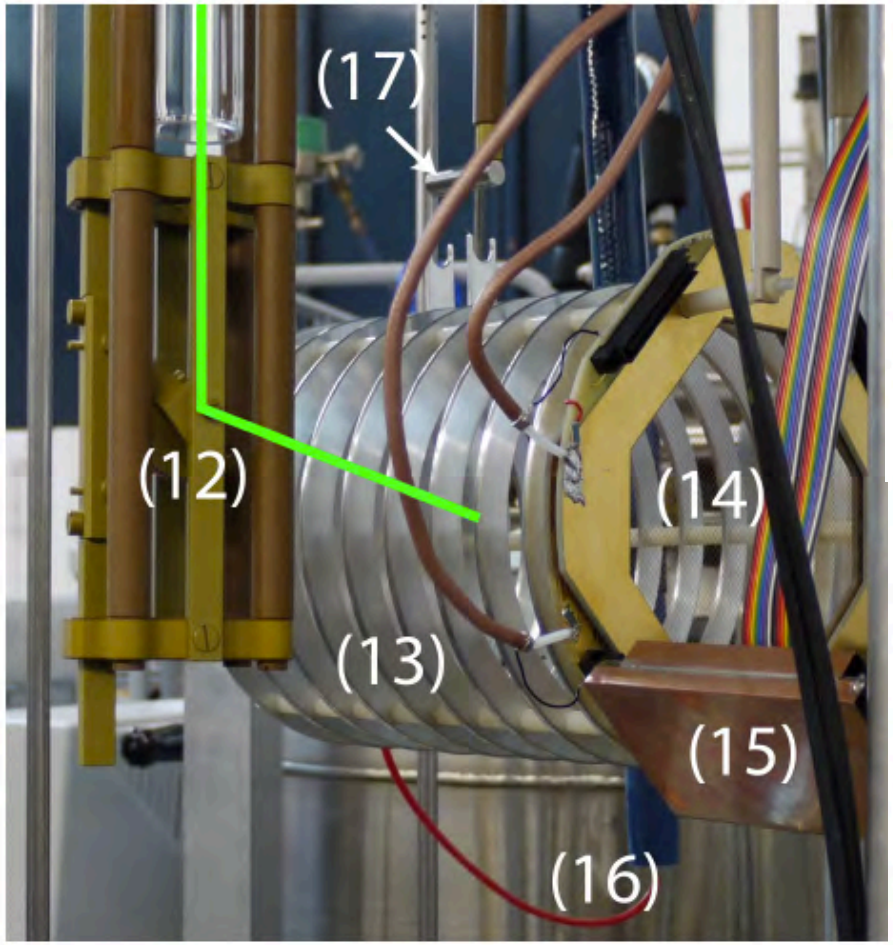

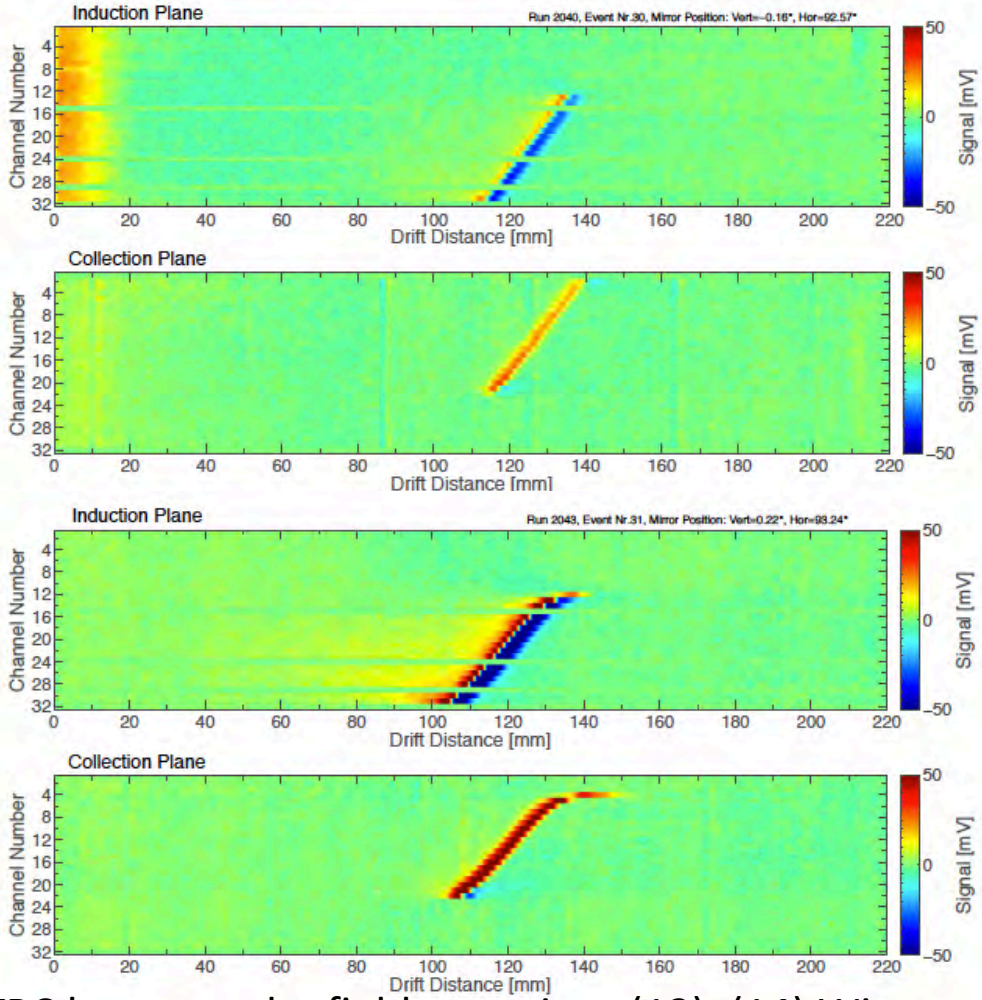

(12) Moveable cold mirror to steer laser into TPC between the field cage rings (13), (14) Wire readout, (15) Cold AISIC, (16) HV supply, (17) Shortening device to introduce field inhomogenity

Questions?

- Thanks for your attention!